PT9232 (Extended Range)

Heavy Industrial • RS232 Communication

Linear Position/Velocity to 1700 inches (4300 cm)
Stroke Range Options: 0-600 to 0-1700 inches
VLS Option To Prevent Free-Release Damage
IP68 • NEMA 6 Protection

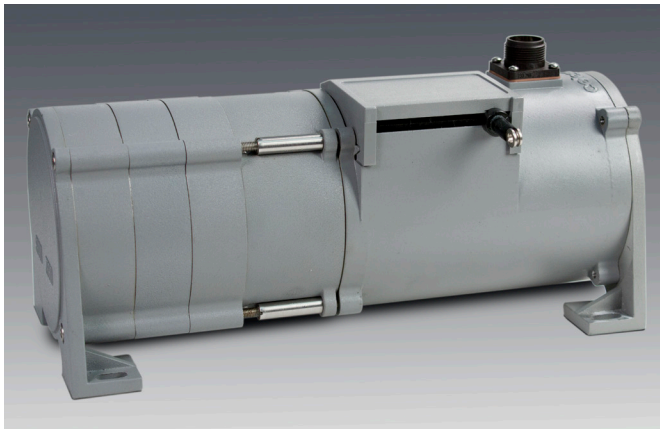

GENERAL

Full Stroke Range Options (on this datasheet)	0-600 to 0-1700 inches
Electrical Interface	RS232
Format	HEX
Accuracy	± 0.10% full stroke
Repeatability	± 0.02% full stroke
Resolution	± 0.003% full stroke
Measuring Cable	stainless steel or thermoplastic
Enclosure Material	powder-painted aluminum or 303 stainless steel
Sensor	plastic-hybrid precision potentiometer
Potentiometer Cycle Life	≥ 250,000 cycles
Maximum Retraction Acceleration	see ordering information
Maximum Velocity	see ordering information
Weight, Aluminum (Stainless Steel) Enclosure	14 lbs. (28 lbs.), max.

ELECTRICAL

Input Voltage	9...22 VDC
Input Current	40 mA
Baud Rate	9600 (selectable to 38.4K)
Update Rate	32 msec

ENVIRONMENTAL

Enclosure	NEMA 4/4X/6, IP 67/68
Operating Temperature	-40° to 200°F (-40° to 90°C)
Vibration	up to 10 g to 2000 Hz maximum

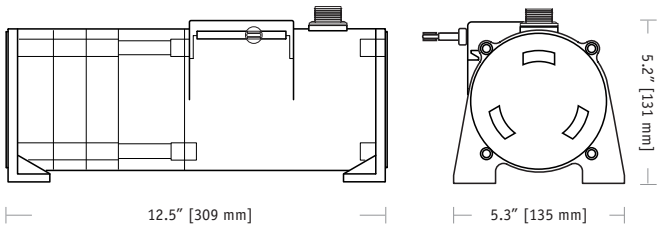

The PT9232 delivers position feedback via RS232 serial communication to your data acquisition or controller system. The PT9232 sends a raw 16-bit count from 0000H to FFFFH. Additionally this device can be set to continuously send data or send data only when polled.

As the internal position sensing element is a precision potentiometer, this transducer maintains current accurate position even during power loss and does not need to be reset to a "home" position.

Output Signal:

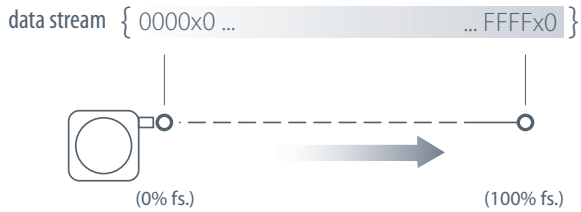

20630 Plummer Street • Chatsworth, CA 91311
tel: 800.423.5483 • +1.818.701.2750 • fax: +1.818.701.2799
measurement SPECIALTIES™
celesco
celesco.com • info@celesco.com

Data Format

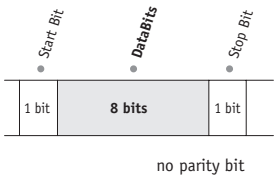

Data Frame

6 byte Hex string:

STX	CMD	B_0	B_1	B_2	ETX

STX = 0x02 **CMD** = Command Code* **B_0 - B_2** = Data Field* **ETX** = 0x03

** –see below*

Important! All communications to/from the transducer are in **HEX**!

User Commands:

	User Command				Sensor Response			
Description	**<CMD>**	**<B_0>**	**<B_1>**	**<B_2>**	**<CMD>**	**<B_0>**	**<B_1>**	**<B_2>**
Get Sensor Info	0x05	0x00	0x00	0x00	0x05	version(4)	date(5)	date(5)
Get Serial Number	0x15	0x00	0x00	0x00	0x15	serial number(3)		
Start Continuous Data	0x25	0x00	0x00	0x00	0x25	0x00	0x00	0x00
Stop Continuous Data	0x35	0x00	0x00	0x00	0x35	0x00	0x00	0x00
Get Position Data	0x45	0x00	0x00	0x00	0x45	CMC(1)	CMC(1)	status(2)

(1)CMC - Current Measurement Count (Position)

The **C**urrent **M**easurement **C**ount (**CMC**) is the output data that indicates the present position of the measuring cable.

The CMC is a 16-bit value that occupies the first two bytes (B_0 and B_1) of the data field. B_0 is the MSB (most significant byte) and B_1 is the LSB (least significant byte).

The CMC starts at 0000H with the measuring cable fully retracted and continues upward to the end of the stroke range stopping at FFFFH. This holds true for all ranges.

(2)Status

The status byte is used as a flag to indicate the validity of the position signal that the internal electronics receives from the potentiometer.

Flags are as follows:
0x00 = GREEN, 0x55 = YELLOW, 0xAA = RED

A "green" flag shows everything OK. A "yellow" or "red" flag indicates that the sensor has either been extended beyond its range or that there is a problem with the potentiometer.

(3)Serial Number

Each sensor has it's own unique serial number. This information can be retrieved by sending the sensor the "Get Serial Number" command.

The serial number is a 3 byte value from which ranges from 0 to 9999999 (decimal).

(4)Version

This is a single byte value (0-255 decimal) which indicates the currently installed firmware version of the sensor.

(5)Date

This is a 2 byte value showing the date of currently installed firmware. This value ranges from 01011 - 12319 (decimal). Format is MMDDY. While the month and day are expressed as two digit numbers the year is expressed in a single digit only.

Example: 08054 = August 5, 2004

Baud Rate

The baud rate can be set using switches **7** & **8** on the 8-pole DIP switch found on the rs232 controller board located inside the transducer.

DIP-7	DIP-8	baud rate
0	0	9600
1	0	19200
0	1	38400
1	1	9600

RS232 Controller Board and DIP Switch Location

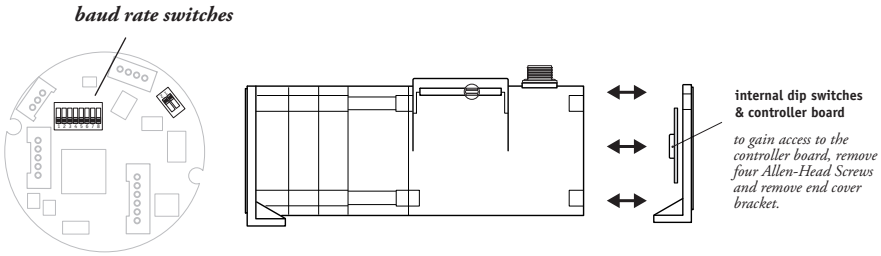

Outline Drawing

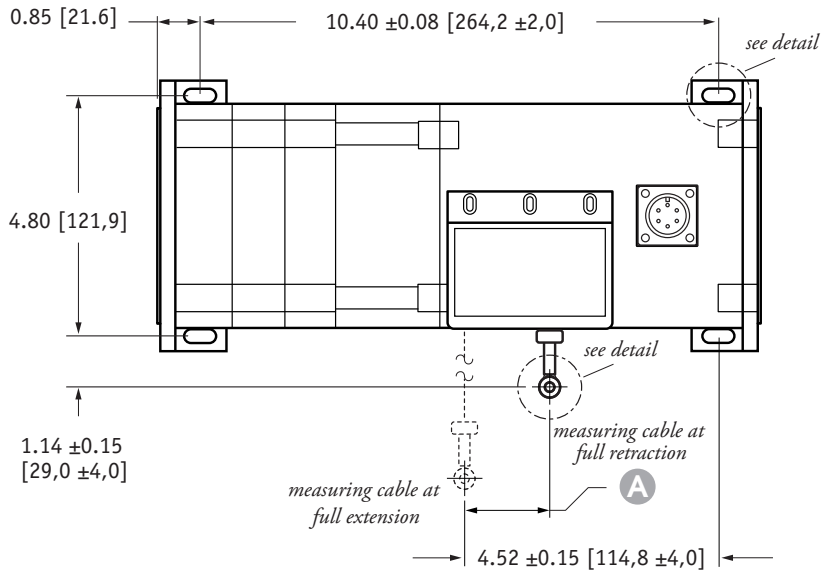

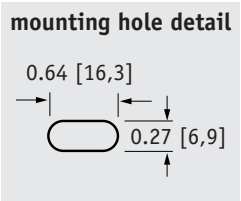

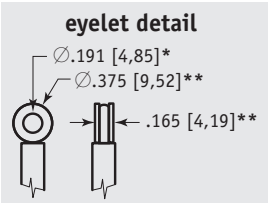

A DIMENSION

RANGE	inches [mm]
600	1.76 [44,7]
800	1.58 [40,1]
1000	1.98 [50,2]
1200	1.98 [50,2]
1500	1.86 [47,2]
1700	2.11 [53,6]

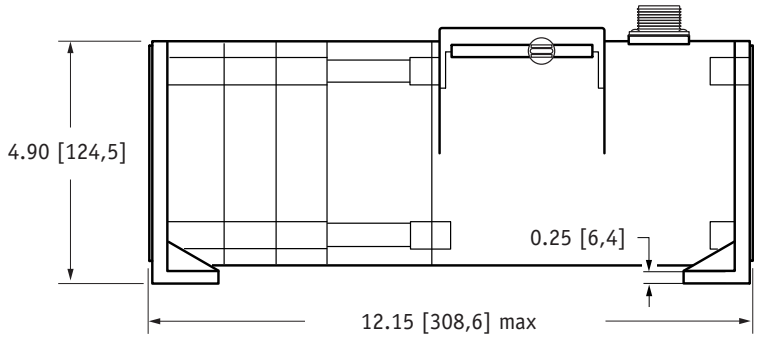

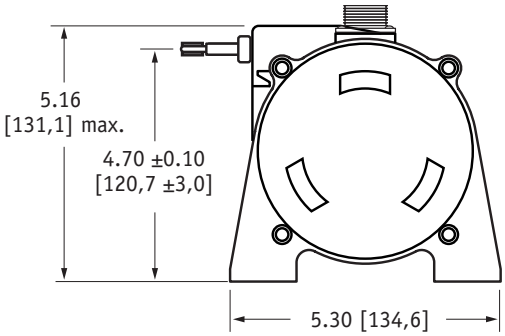

DIMENSIONS ARE IN INCHES [MM]
tolerances are 0.03 IN. [0.5 MM] unless otherwise noted.

* tolerance = +.005 –.001 [+.13 –.03]
** tolerance = +.005 –.005 [+.13 –.13]

Ordering Information:

Model Number:

PT9232 - ____ - ____ - ____ - ____
order code: R A B C

Sample Model Number:

PT9232 - 1200 - AL - FR - M6

R	range:	1200 inches
A	enclosure	aluminum
B	cable exit:	front (horizontal)
C	electrical connection:	6-pin plastic connector

Full Stroke Range:

R *order code:*	600	800	1000	1200	1500	1700
full stroke range, min:	600 in.	800 in.	1000 in.	1200 in.	1500 in.	1700 in.
cable tension (±35%):	27 oz.	24 oz.	20 oz.	19 oz.	18 oz.	17 oz.
measuring cable:	.034-in. dia. nylon-coated stainless	.019-in. dia. nylon-coated stainless	.019-in. dia. nylon-coated stainless	.019-in. dia. nylon-coated stainless	.014-in. dia. nylon-coated stainless	.014-in. dia. nylon-coated stainless

Ordering Information (cont.):

Enclosure Material:

Ⓐ order code:	AL	SS
enclosure material:	powder-painted aluminum	303 stainless steel
max. acceleration:	1g	1g
max. velocity:	60 inches/sec.	60 inches/sec.

Cable Exit:

Ⓑ order code:	FR	UP	BK	DN
	front	top	back	down

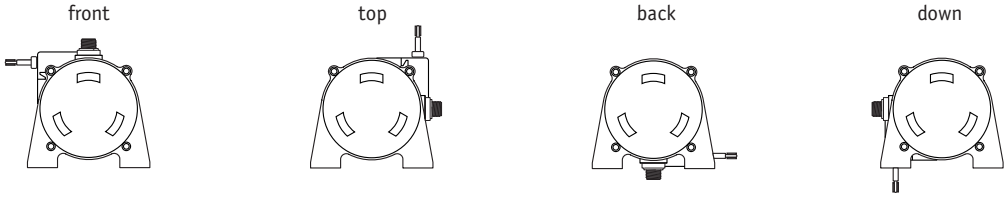

Electrical Connection:

Ⓒ order code:	M6	C25
	6-pin plastic connector with mating plug	25-ft. instrumentation cable 24 AWG, shielded
	IP 67, NEMA 6, NEMA 4X (stainless enclosure only)	**IP 67, NEMA 6**

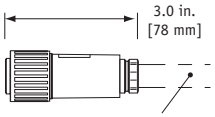

.30 – .39 in. [8 – 10 mm] cable dia.
16 AWG max conductor size
connector: MS3102E-14S-6P
mating plug: MS3106E-14S-6S

contact view

pin	signal
A	9...22 VDC
B	common
C	–
D	Transmitted Data
E	Received Data
F	common

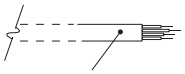

25 ft. x 0.2-in. dia.
[7,5 M x 5 mm dia.]
24 AWG, shielded

color code	signal
Red	9...22 VDC
Black	common
White	–
Green	Transmitted Data
Blue	Received Data
Brown	common

VLS Option - Free Release Protection

The patented Celesco Velocity Limiting System (VLS) is an option for PT9000 Series cable extension transducers that limits cable retraction to a safe 40 to 55 inches per second for the single spring option and 40 to 80 inches per second for the higher tension dual spring option.

The VLS option prevents the measuring cable from ever reaching a damaging velocity during an accidental free release. This option is ideal for mobile applications that require frequent cable disconnection and reconnection. It prevents expensive unscheduled downtime due to accidental cable mishandling or attachment failure.

How To Configure Model Number for VLS Option:

VLS9232 - ____ Ⓡ - Ⓐ Ⓑ Ⓒ - Ⓓ Ⓔ Ⓕ Ⓖ

creating VLS model number (example)...

1. select PT9232 model — **PT9232-0100-111-1110**
2. remove "PT" from the model number — ~~PT~~ **9232-0100-111-1110**
3. add "VLS" — **VLS + 9232-0100-111-1110**
4. completed model number ! — **VLS9232-0100-111-1110**

version: **8.0** last updated: **November 10, 2014**