PT9301 (Extended Range)

Extended Ranges • Position/Velocity Output

Linear Position/Velocity to 1700 inches (4300 cm)
Stroke Range Options: 0-600 to 0-1700 inches
VLS Option To Prevent Free-Release Damage
IP68 • NEMA 6 Protection

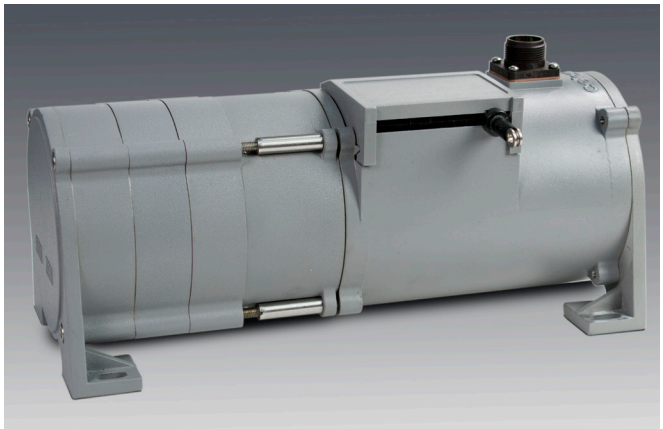

GENERAL

Full Stroke Range Options (on this datasheet)	0-600 to 0-1700 inches
Measuring Cable Options	stainless steel or thermoplastic
Enclosure Material	powder-painted aluminum or 303 stainless steel
Sensor, Position	plastic-hybrid precision potentiometer
Sensor, Velocity	DC tach generator
Maximum Retraction Acceleration	see ordering information
Maximum Velocity	see ordering information
Weight, Aluminum (Stainless Steel) Enclosure	14 lbs. (28 lbs.) max.

POSITION

Output Signal	voltage divider (potentiometer)
Accuracy	± 0.10% full stroke
Repeatability	± 0.02% full stroke
Resolution	essentially infinite
Sensor, Position	plastic-hybrid precision potentiometer
Potentiometer Cycle Life	≥250,000
Input Resistance Options	500, 1K, 5K or 10K Ω (see ordering information)
Power Rating, Watts	2.0 at 70°F derated to 0 at 250°F
Recommended Maximum Input Voltage	30V (AC/DC)
Output Signal Change Over Full Stroke Range	94% ±4% of input voltage

VELOCITY

Output Signal	DC tachometer output
Linearity	better than ±0.10% of output at any velocity
Repeatability	±0.10% of reading
Sensor	tach generator
Input Voltage	none required
Output Voltage @ 100 inches per minute	361 mV ±3%
Output Impedance	350 ohms ±10%
Output Ripple (for velocity ≥ 1.29 inches per second)	±3% rms

ENVIRONMENTAL

Enclosure	NEMA 4/4X/6, IP 67/68
Operating Temperature	-40° to 200°F (-40° to 90°C)
Vibration	up to 10 g to 2000 Hz maximum

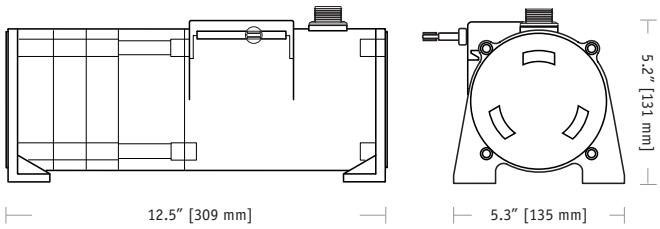

The PT9301 is a combination position and velocity transducer for demanding long-range applications requiring a linear position measurements in ranges up to 1700". A precision plastic-hybrid potentiometer provides accurate position feedback while a self-generating DC tachometer provides a velocity signal that is proportional to the speed of the traveling stainless-steel measuring cable.

As a member of Celesco's innovative family of NEMA-4 rated cable-extension transducers, the PT9301 offers numerous benefits. It installs in minutes, functions properly without perfectly parallel alignment, and when its cable is retracted, it measures only 6".

Output Signal:

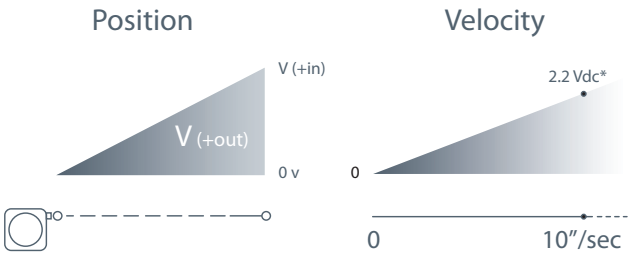

**velocity output rate = 361 mV ± 3% @ 100 inches per min.*

20630 Plummer Street • Chatsworth, CA 91311
tel: 800.423.5483 • +1.818.701.2750 • fax: +1.818.701.2799
measurement SPECIALTIES™
celesco
celesco.com • info@celesco.com

Outline Drawing

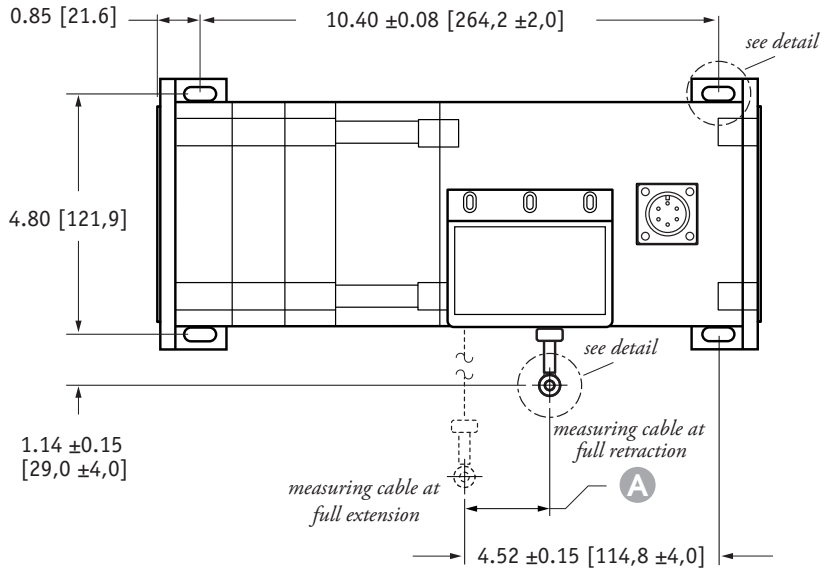

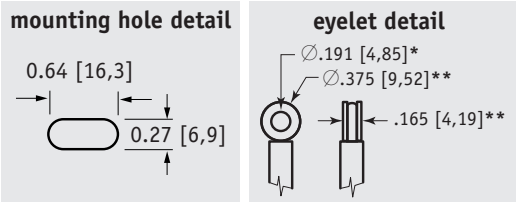

A DIMENSION

RANGE	inches [mm]
600	1.76 [44,7]
800	1.58 [40,1]
1000	1.98 [50,2]
1200	1.98 [50,2]
1500	1.86 [47,2]
1700	2.11 [53,6]

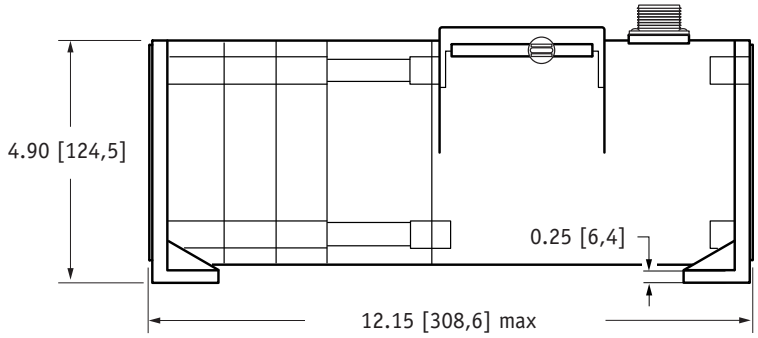

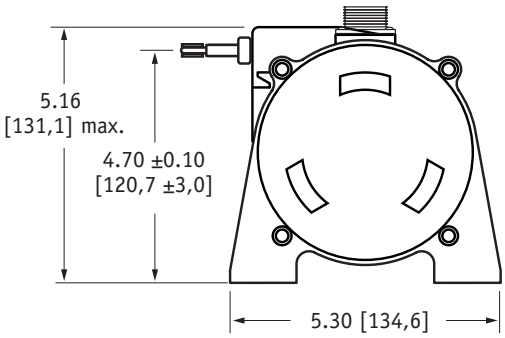

DIMENSIONS ARE IN INCHES [MM]
tolerances are 0.03 IN. [0.5 MM] unless otherwise noted.

* tolerance = +.005 –.001 [+.13 –.03]
** tolerance = +.005 –.005 [+.13 –.13]

VLS Option - Free Release Protection

The patented Celesco Velocity Limiting System (VLS) is an option for PT9000 Series cable extension transducers that limits cable retraction to a safe 40 to 55 inches per second for the single spring option and 40 to 80 inches per second for the higher tension dual spring option.

The VLS option prevents the measuring cable from ever reaching a damaging velocity during an accidental free release. This option is ideal for mobile applications that require frequent cable disconnection and reconnection. It prevents expensive unscheduled downtime due to accidental cable mishandling or attachment failure.

How To Configure Model Number for VLS Option:

VLS 9301- ____ - ____ ____ ____ - ____ ____ ____ ____
R A B C D E F G

creating VLS model number (example)...

1. select PT9301 model — **PT9301-1200-111-1110**
2. remove "PT" from the model number — ~~PT~~ **9301-1200-111-1110**
3. add "VLS" — **VLS + 9301-1200-111-1110**
4. completed model number ! — **VLS9301-1200-111-1110**

Ordering Information:

Model Number:

PT9301- ___ (R) **-** ___ (A) ___ (B) ___ (C) **-** ___ (D) **1** (E) ___ (F) **0** (G)

order code:

Sample Model Number:

PT9301 - 1200 - 111 - 1110

Ⓡ range:	1200 inches
Ⓐ enclosure:	aluminum
Ⓑ measuring cable:	nylon-coated stainless
Ⓒ cable exit:	front
Ⓓ output signal:	500 ohm position / DC tachometer velocity
Ⓕ electrical connection:	6-pin plastic connector

Full Stroke Range:

Ⓡ *order code:*	**0600**	**0800**	**1000**	**1200**	**1500**	**1700**
full stroke range, min:	600 in.	800 in.	1000 in.	1200 in.	1500 in.	1700 in.
cable tension (±35%):	27 oz.	24 oz.	20 oz.	19 oz.	18 oz.	17 oz.

Enclosure Material:

Ⓐ *order code:*	**1**	**3**
enclosure material:	powder-painted aluminum	303 stainless steel
max. acceleration:	1g	1g
max. velocity:	60 inches/sec.	60 inches/sec.

Measuring Cable:

Ⓑ *order code:*	**1**	**2**
cable construction:	nylon-coated stainless steel rope*	bare stainless steel rope*
general use:	*indoor*	*outdoor, debris, high temperature*

**cable diameter:*

stroke range:	**0600**	**0800**	**1000**	**1200**	**1500**	**1700**
nylon-coated stainless:	.034 in.	.019 in.	.019 in.	.019 in.	.014 in.	.014 in.
bare stainless:	.031 in.	.018 in.	.018 in.	.018 in.	.015 in.	.015 in.

Cable Exit:

Ⓒ *order code:*	**1**	**2**	**3**	**4**
	front	top	back	down

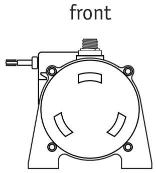
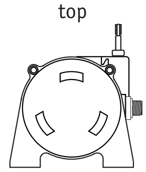
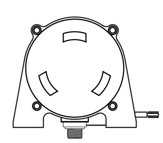
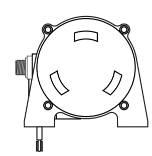

Output Signals:

Ⓓ *order code:*	**1**	**2**	**3**	**4**
position sensing potentiometer:	500 ohms*	1000 ohms*	5000 ohms*	10,000 ohms*

position sensing circuit

value specified by ordercode

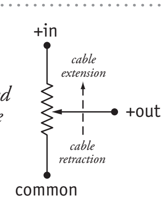

velocity sensing circuit

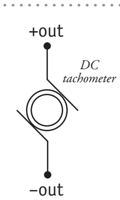

**–tolerance = ±10%*

tel: 800.423.5483 • +1.818.701.2750 • fax: +1.818.701.2799
now Measurement Specialties, Inc.
celesco
celesco.com • info@celesco.com

Ordering Information (cont.):

Electrical Connection:

Ⓕ *order code:*	1	3	4
	6-pin plastic connector with mating plug	6-pin metal connector with mating plug	25-ft. instrumentation cable 24 AWG, shielded
	IP 67, NEMA 4X*,6	**IP 65, NEMA 4**	**IP 67, NEMA 6**
	3.0 in. [78 mm]	2.4 in. [60 mm]	
	1/2 - 5/16" [14 - 8 mm] cable dia. 16 AWG max conductor size connector: MS3102E-14S-6P mating plug: MS3106E-14S-6S	3/8-in. [9 mm] max cable dia. 16 AWG max conductor size connector: MS3102E-14S-6P mating plug: MS3106E-14S-6S	25 ft. x 0.2-in. dia. [7,5 M x 5 mm dia.] 24 AWG, shielded

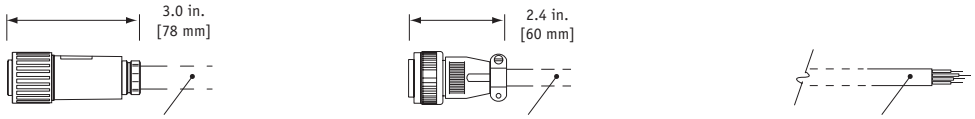

6-pin mating plug:

pin	signal	
A	+ in	*position*
B	common	*position*
C	+ out	*position*
D	-	
E	+ out	*velocity*
F	- out	*velocity*

contact view

25-ft. instrumentation cable:

color	signal	
red	+ in	*position*
black	common	*position*
green	+ out	*position*
white	+ out	*velocity*
brown	- out	*velocity*

** –applies to stainless steel enclosure only*

version: **7.0** last updated: **November 10, 2014**